BOBRICK

Technical Data

DOUBLE-ROLL STAINLESS STEEL TOILET TISSUE DISPENSER

B-7686
B-76867

Specify Model Required:
- ☐ Model B-7686 Bright polished stainless steel
- ☐ Model B-76867 Satin-finish stainless steel

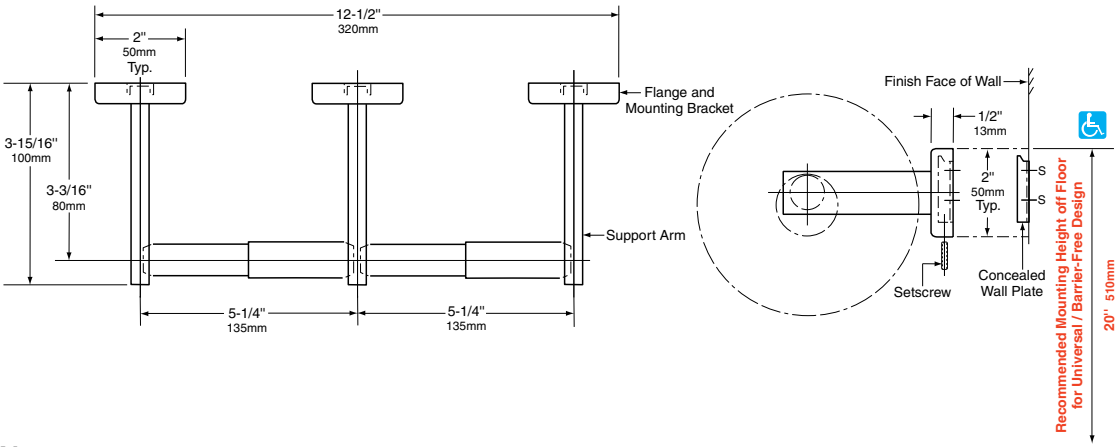

MATERIAL:

Flanges & Support Arms (3) — 18-8 S, type-304, 22-gauge (0.8mm) stainless steel. Each flange has a concealed, 18-gauge (1.2mm) stainless steel mounting bracket. All-welded construction. Secured to wall plate with a stainless steel setscrew.

Concealed Wall Plates (3) — 18-8 S, type-304, 19-gauge (1.0mm) stainless steel.

Spindles (2) — Chrome-plated plastic. Equipped with heavy-duty internal spring.

INSTALLATION:

To remove concealed wall plates from back of flanges and mounting brackets, loosen setscrews. Mount each wall plate with prongs at top; secure with sheet-metal screws, furnished by manufacturer, at points indicated by an *S*. Engage mounting brackets onto prongs of wall plate, then secure into position by tightening setscrews at bottom of flanges.

Note: Centerline-to-centerline of concealed wall plates must be within 1/16" (1.6mm) of dimension shown.

For plaster or dry wall construction, provide concealed backing to comply with local building codes, then secure the unit with sheet-metal screws furnished. For other wall surfaces, provide fiber plugs or expansion shields for use with sheet-metal screws furnished by manufacturer, or provide 1/8" (3mm) toggle bolts or expansion bolts.

For partitions with particle-board or other solid core, secure with sheet-metal screws furnished, or provide through-bolts, nuts, and washers. For hollow-core metal partitions, provide solid backing into which the furnished sheet-metal screws can be secured.

SPECIFICATION:

Double-roll toilet tissue dispenser shall be type-304 stainless steel with _____ (insert one: bright polished or satin) finish. Unit shall accommodate two standard-core toilet paper rolls up to 5-1/2" (140mm) diameter (1800 sheets). Flanges and support arms shall be 22 gauge (0.8mm) and equipped with concealed, 18-gauge (1.2mm) mounting brackets that are secured to concealed, 19-gauge (1.0mm) wall plates with stainless steel setscrews. *Spindles shall be equipped with heavy-duty internal springs. Manufacturer's service and parts manual shall be provided to the building owner/manager upon request.

**Designer's Note: Theft-resistant toilet tissue spindles, which require special key for removal, are available as an optional accessory. To specify, add suffix .60 to model number. Example: B-7686.60.*

RYNAT industries

RYNAT INDUSTRIES AUSTRALIA PTY LTD | www.rynat.com | Email: sales@rynat.com |

| Aust Wide: 1300 558 518 | Tel: +61 8 6254 6555 | 20 Murray Rd South Welshpool WA |

The illustrations and descriptions herein are applicable to production as of the date of this Technical Data Sheet.
The manufacturer reserves the right to, and does from time to time, make changes and improvements in designs and dimensions.

Revised 5/06 Printed in U.S.A.

© 2006 by Bobrick Washroom Equipment, Inc.